Reg. No. | | | | | | | | | | | [14CE14/24]

FIRST SEMESTER B.TECH. EXAMINATION, DECEMBER – 2015

BASICS OF CIVIL ENGINEERING SYSTEMS

Time: 3 Hours **Maximum Marks:70**

Answer any FIVE full questions choosing at least two from each.

PART - A

1. a. Mention the different fields of civil engineering and explain any four of them. **08**

   b. Write short notes on: **06**

   i. Paints ii. Varnishes iii. Steel and its commercial forms

2. a. Mention the types of infrastructures? What is the role of civil engineers in the infrastructure development? **07**

   b. Differentiate between:

   i. Through and Semi through bridges

   ii. Detection dams and storage dams

   iii. National highways and state highways **07**

3. a. Write short notes on:

   i. Types of residential buildings

   ii. Factors for selection of site

   iii. Principles of planning

   iv. Rain water harvesting **08**

   b. What is a Green building? Mention and explain various eco-friendly materials in construction. **06**

4. a. Explain the following terms as uses in engineering mechanics:

   i. Continuum ii. Rigid body

   iii. Particle iv. Moment and couple **08**

   b. The top view of a revolving entrance door is shown in figure 4(b). Two persons approach simultaneously and exert forces of equal magnitude as shown in figure. If the resulting moment about the door pivot axis at 0 is 20N-m, determine the magnitude of the force. **06**

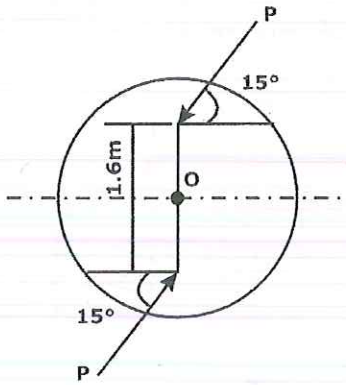

Fig. 4 (b)

SCHOOL OF ENGINEERING & TECHNOLOGY JAIN UNIVERSITY BANGALORE LIBRARY DATE

PART - B

5. a. State and prove Varignon's theorem of moments. **06**

b. A bracket is subjected to three forces and a couple as shown in figure. Determine magnitude and the line at action of the resultant. **08**

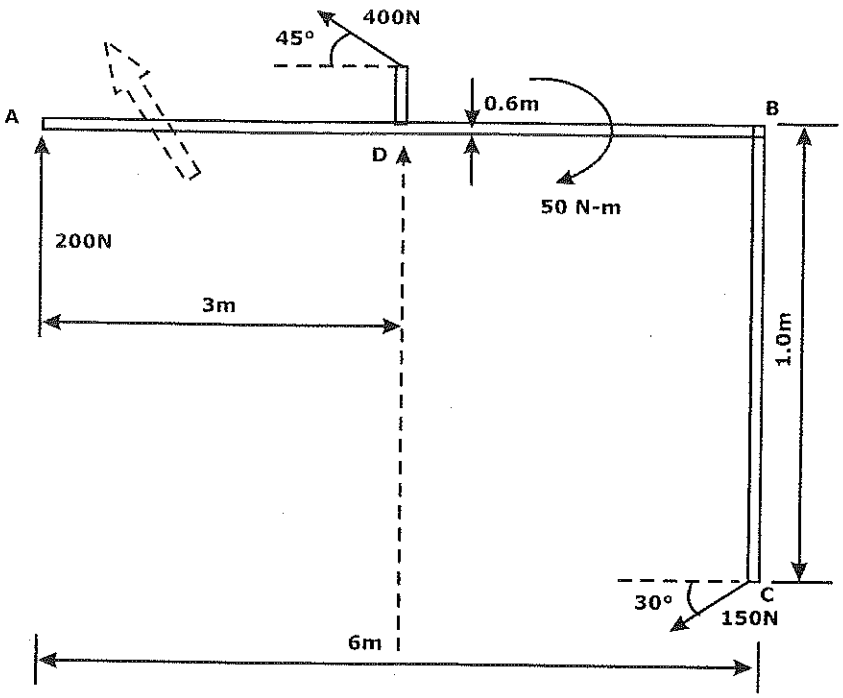

Fig. 5 (b)

6. a. State and prove lami's theorem. **06**

b. Find the support reaction developed at A and B of the loaded beam shown in figure 6(b). **08**

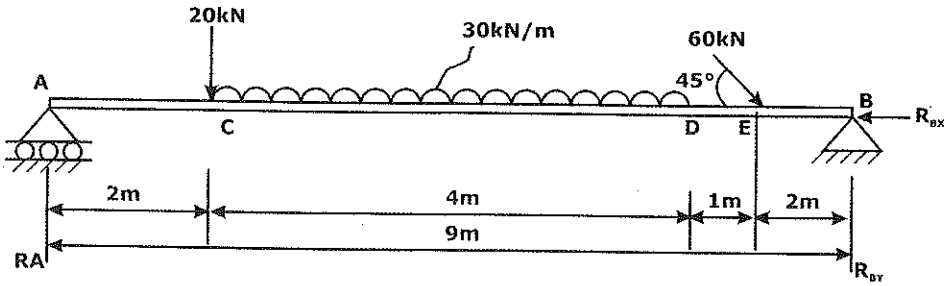

Fig. 6 (b)

7. a. Derive an expression for centroid of a triangle from first principles? **06**

b. Determine the moment of Inertia about the base of the plane lamina shown in figure 7(b). Also find radius of gyration k about the base. **08**

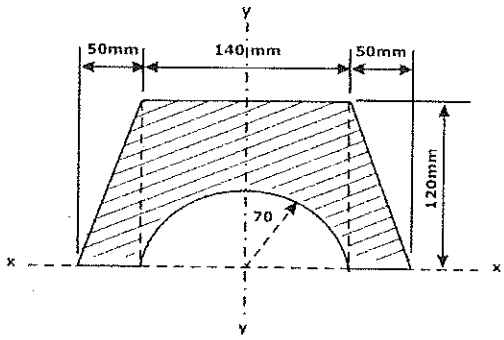

Fig. 7(b)

8. **a.** Write short notes on the following:

i. Limiting friction **ii.** Cone of friction

iii. Angle of friction **iv.** Angle of repose **08**

b. What is the value of P in the system shown in figure 8(b) to cause the motion to impend? Assume the pulley is smooth and Co-efficient of friction between the other two contact surfaces is 0.2. **06**

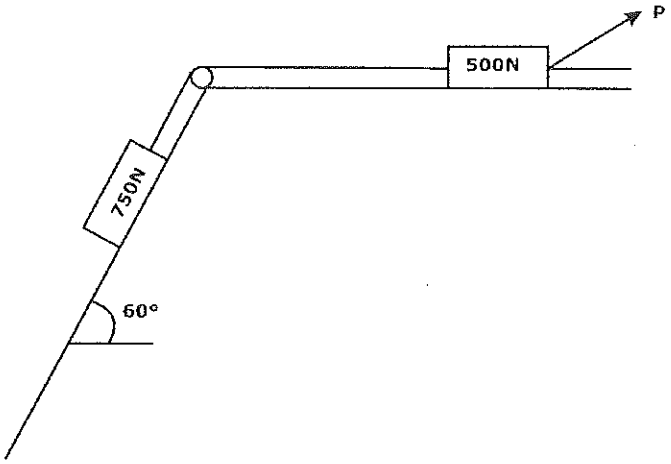

Fig. 8(b)